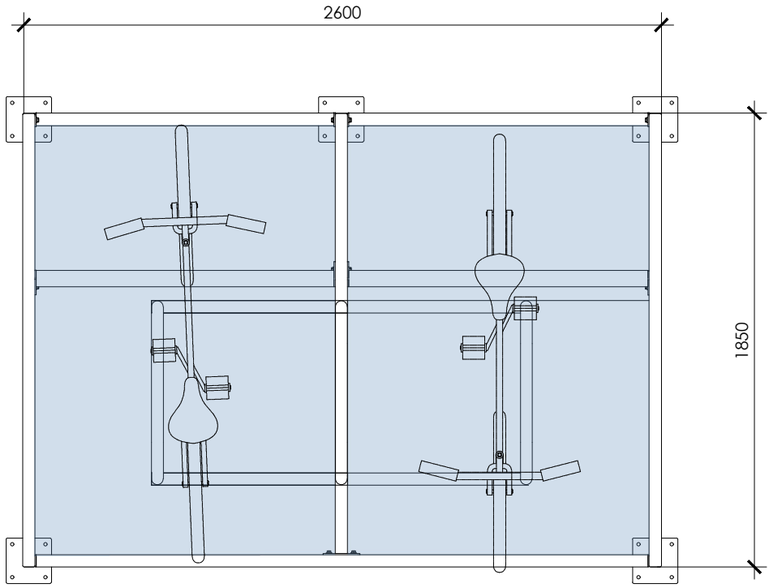

PLAN

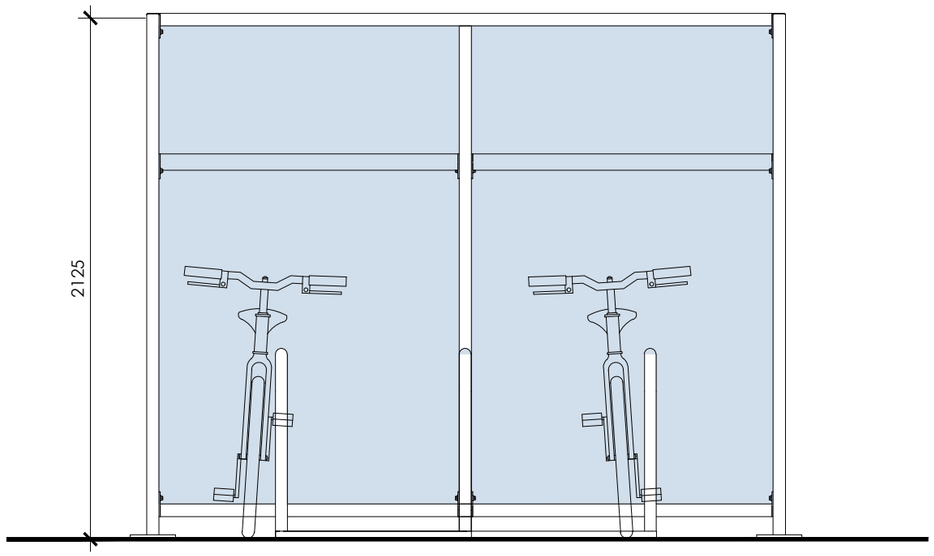

FRONT ELEVATION



PRODUCT IMAGE

BROXAP.CO.UK
info@broxap.com
01782 564411

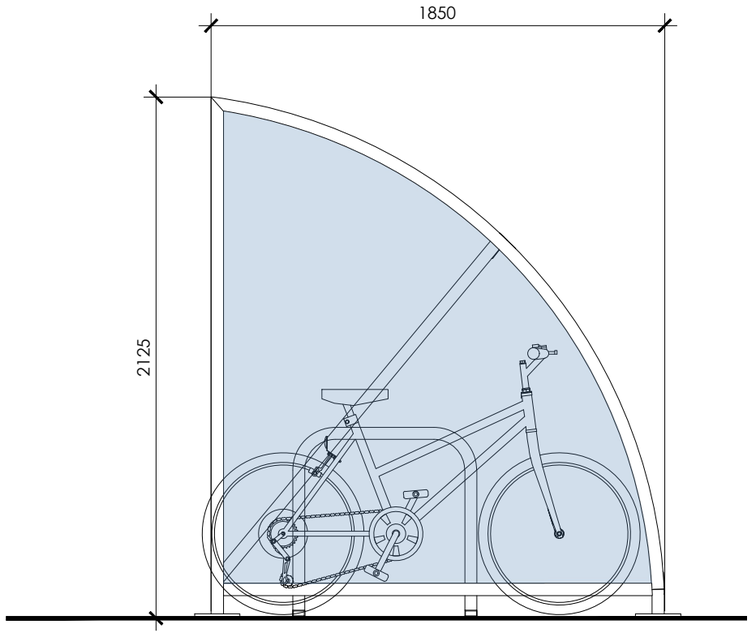

SIDE ELEVATION

CYCLE STORE DETAILS

Scale 1:20

Do not scale from this drawing.
The users of this drawing shall check all dimensions & report all errors and omissions to LeTrucco Design.

This drawing is copyright. It must not be copied, used or disclosed to third parties without prior permission of LeTrucco Design.

Revisions		
	Revision	Checked
		kml

Scale	1:20 @ A3	Date	Sept 26
Drawing No	LT2606.04.06	Drawing Title	Ext Cycle store Details
Client	Trivallis HA	Job Title	The Sidings, Treforest

Drawing Purpose
PLANNING

LeTruccodesign
ARCHITECTURE
Suite 7, 35 Stow Park Circle
Newport, NP20 4HF
Tel: 07710390800 / 07710390801
info@letruccodesign.co.uk
www.letruccodesign.co.uk